COPYRIGHT AND CONFIDENTIAL
The information on this document is the property of BHARAT HEAVY ELECTRICALS LIMITED,
It must not be used directly or indirectly in any way detrimental to the interest of the company.

DOUBLE UPPER BEARING JOURNALS ASSEMBLY PROCEDURE FOR 583-1103 PULVERIZERS

1.0 SCOPE:

This standard covers assembly procedure for Double Upper Bearing journals.

2.0 CONTENT:

a) ESTABLISH UPPER BEARING BENCH END PLAY
Measure the upper journal-housing bore. Grind the bearing spacer.

b) ASSEMBLE BEARING HOUSING AND CHECK END –PLAY
Install the double bearing in the upper journal housing. Install bearing keepers and shims. Check upper bearing end play.

c) ASSEMBLE THE LOWER JOURNAL HOUSING SUB-ASSEMBLY.

Grinding roll with lock nut (taper fit connection).
Grinding roll with keeper plate (shrink fit connection).
Grinding roll with keeper plates (taper fit connection).
Install the lower journal-bearing cup.

d) JOURNAL SHAFT SUB-ASSEMBLY

Check shafts straightness and roundness
Assembly of long spacer shaft journals.
- Install the oil seal wear ring.
- Install the upper bearing assembly.
- Install the lower journal-bearing cone.
- Install bearing keeper and shim assembly.

Assembly of large diameter shaft journals.
- Install the lower bearing cone.
- Install bearing keeper and shim assembly.

e) ASSEMBLY THE JOURNAL SHAFT TO THE HOUSING ASSEMBLIES CHECK JOURNAL ASSEMBLY END PLAY

Journal shaft and housing sub-assemblies.
Check Journal assembly bearing end play.

COPYRIGHT AND CONFIDENTIAL
The information on this document is the property of BHARAT HEAVY ELECTRICALS LIMITED,
It must not be used directly or indirectly in any way detrimental to the interest of the company.

TABLES

Spacer Grinding Dimensions, 583-743 Pulverizers - Table 1
Spacer Grinding Dimensions, 823-863 Pulverizers - Table 2
Spacer Grinding Dimensions, 883-943 Pulverizers - Table 3
Spacer Grinding Dimensions, 883-1003 Pulverizers - Table 4A&4B
Spacer Grinding Dimensions, 963- 1103 Pulverizers - Table 5A&5B
Pulverizer Journal lift load and End play - Table 6

FIGURES

Determination of bore diameters - Figure 1
Journal Bearing spacer length determination - Figure 2
Journal Bearing outside diameter - Figure 3
Bearing keeper Shim pack - Figure 4
Torque Specification Chart - Figure 5
End play fixture - Figure 6
Upper Bearing End play - Figure 7
Roller Bearing Housing Interference - Figure 8
Roller Bearing Housing Shim pack - Figure 9
Lower Journal Housing bore dimensions & Interference - Figure 10
Shaft out of Round and Straightness - Figure 11
Journal Housing Flange Gap Shims - Figure 12
Journal Assembly End play - Figure 13
Journal Head Skirt Flange Gap - Figure 14

APPENDEX

Upper bearing Bench end Play (Special) -Appendix A

COPYRIGHT AND CONFIDENTIAL
The information on this document is the property of BHARAT HEAVY ELECTRICALS LIMITED,
It must not be used directly or indirectly in any way detrimental to the interest of the company.

The assembly of a pulverizer journal shaft with double upper bearings requires several distinct steps performed in the proper sequence to assure that proper clearances are obtained. Proper clearances must be obtained to ensure maximum bearing life.

I. Establish the upper bearing bench end play by grinding the spacer supplied with the double bearing.

II. Assemble the upper journal housing subassembly and check the bearing end play.

III. Assemble the lower journal housing sub-assembly and install the journal roll.

IV. Assemble the journal shaft sub-assembly.

V. Assemble journal shaft sub-assembly and journal housing assemblies. Check the journal assembly bearing end play.

NOTE:

Extra sets of the Figures in this section should be available to record measurements, readings and settings made. These may be retained for an equipment maintenance history.

CAUTION:

Because the measurements taken during the assembly of the Bearings must be so precise, all of the components and measuring tools must be at 70° F. (21 ° C). If this is not practical, then the measurements must be corrected for Thermal expansion to 70 ° F. (21 ° C).

CAUTION:

Upper Journal Bearings are supplied in matched and serialized sets. The cups and cones are not interchangeable. Each cup must be kept with its mating cone. The bearing spacer is also matched with the cups and cone and should not be interchanged with other bearings. If an error occurs in the grinding and as a result the bench endplay is out of tolerance, the spacer may be reworked. Add material to the ground surface by welding, flame spraying or plating and regrind to the correct dimension.

COPYRIGHT AND CONFIDENTIAL
The information on this document is the property of BHARAT HEAVY ELECTRICALS LIMITED,
It must not be used directly or indirectly in any way detrimental to the interest of the company.

I. ESTABLISH UPPER BEARING BENCH END PLAY

NOTE

Journal assemblies 101-00920, 101-00921 and 101-00333 using upper bearing P/N GP-1668 require a slightly different bench end play setting procedure, refer to Appendix "A".

1.0 Measure and record the upper journal housing bearing bore. Use procedures and Figure 1. Retain data for future reference.

NOTE

Refer to Table 1 through 6, select the correct pulverizer size, journal housing and bearing part numbers. Use the bore measurement from step1.0 to determine the recommended amount to grind the bearing spacer.

Table	Pulverizer	Journal Housing P/N	Journal Brg. P/N
1	643-663	GP-3325	GP-3339
2	683- 743	GP-3988	GP-2908
	763-803	GP-3971	GP-2908
	823-863	86-922	GP-2908
3	883-943	GP-3067	GP-3064
4	883-943	94-852	GP-2484
	963-1003	101-00971	GP-2484
5	963-1003	101-01081	GP-1668
	1023-1103	110-00667	GP-1668
6	883-1003	GP-3810	GP-1668
	1023-1103	110-00760	GP-1668

COPYRIGHT AND CONFIDENTIAL
The information on this document is the property of BHARAT HEAVY ELECTRICALS LIMITED,
It must not be used directly or indirectly in any way detrimental to the interest of the company.

2.0 Grind the bearing spacer

2.1 Measure and record the spacer length, use procedure Figure 2.

2.2 Reference the average bore measurement made in step 1.0, grind the spacer.

2.3 Measure and record the spacer ground length.

CAUTION

THE BEARING, SPACER AND HOUSING ARE NOW A MATCHED SET. THE BEARING AND SPACER ARE NOT INTERCHANGEABLE WITH OTHER HOUSINGS.

II. <u>ASSEMBLE BEARING IN HOUSING AND CHECK END PLAY</u>

3.0 Install the double bearing in the upper journal housing.

3.1 Measure and record the bearings outside diameter use procedures Figure.3

3.2 Calculate the bearing, bearing housing interference fit by subtracting the average housing bore diameter D, from the average bearing outside diameter FAVG. Figure 1 and 3.

For ease of assembly each 0.001” (0.0254 mm) of interference requires a 10 ° F (5.5° C) temperature differential between the bearing cups and bearing housing.

To facilitate future disassembly coat the O.D of the bearing cups with Molykote 41 or equal (If bearings are chilled for insertion coat the bearing housing bore).

3.3 Heat the upper journal housing to approximately (175 ° F) (80 ° C)

NOTE:

As an alternate assembly method, the bearing cups and spacer may be chilled in dry ice instead of heating the bearing housing. If the chilling method is used, the bearing cups, cones and roller bearings must be completely coated with the recommended journal oil immediately after assembly to prevent water etching. The assembly sequence is the same, see steps 3.4 and 3.5

COPYRIGHT AND CONFIDENTIAL
The information on this document is the property of BHARAT HEAVY ELECTRICALS LIMITED,
It must not be used directly or indirectly in any way detrimental to the interest of the company.

3.4 Install the lower bearing cup squarely in the housing, follow in rapid order and sequence with the finish ground bearing spacer, the bearing cone assembly(s). the second bearing cup, the bearing ring (if so equipped) and the bearing keeper.

3.5 Insert and torque the bearing keeper bolts bolts to 50-ft lbs (6.91 kgm) to ensure that the bearing cup and spacer stack is properly seated.

3.6 Allow the housing and bearings to return to room temperature.

4.0 Install bearing keeper and shims

4.1 Using a 0.001" (0.0254 mm) feeler gauge, check between the bearing housing shoulder and the bearing cup to assure the bearing cup is properly seated.

4.2 Relieve tension on the bearing keeper cap screws to finger tight.

4.3 Measure the gap between the end face of the housing and the bearing keeper in four places, reference Figure "4". Average the measurements.

4.4 Assemble a shim pack with a total thickness of 0.003" to 0.005" (0.0762 mm to 0.127 mm) less than the gap measured in step 4.3. Check the thickness of the shims with a micrometer.

4.5 Remove cap screws and bearing keeper. Assemble the shim pack to the upper housing making sure that the shims do not block the oil return holes in the housing.

4.6 Replace the bearing keeper, align the oil holes.

4.7 Use a thread locking/ sealant, reinstall the cap screws and uniformly torque. Figure "5".

5.0 Check upper bearing end play

5.1 Arrange the upper journal housing and bearings in the end play fixture available from combustion Engineering. Refer to Figure 6.
A base capable of withstanding a lift load of 4400 lbs (2000Kg) must be provided.

5.2 Attach an overhead hoist, a come-along and a direct reading load cell of approximately 5-ton capacity to the eyebolt of the end play fixture. All components must be of sufficient capacity to with stand the lift load for your bearing, upper housing assembly given on the upper bearing lift load and End play Table, Table 6.

COPYRIGHT AND CONFIDENTIAL
The information on this document is the property of BHARAT HEAVY ELECTRICALS LIMITED,
It must not be used directly or indirectly in any way detrimental to the interest of the company.

5.3 Mount three dial indicators as shown in Figure 6. Rest the contact buttons on the top of the housing.

5.4 Rotate the housing at least five revolutions in one direction to seat the bearing rollers.

5.5 Zero the dial indicators and mark their position on the housing.

5.6 Raise the housing and bearing cups with the come –along until the load cell reads the lift load value determined in step. 5.2

5.7 Turn the housing five revolutions in one direction. Return the dial indicators to their original position record the readings, refer to Figure 7.

5.8 Lower the come- along until the load on the housing is released.

5.9 Turn the housing five revolutions in one direction. Return the dial indicators to their original position and record the indicator readings.

5.10 If the indicators have returned to zero ± 0.0005" (± 0.0127mm) in step 5.9 calculate and record the average indicator reading for step 5.7 on the worksheet. If the indicators do not return to zero ± 0.0005" (± 0.0127mm) disregard the average reading.

5.11 Repeat steps 5.5 through 5.10 until at least three average readings are recorded on the worksheet.

5.12 Average the average readings on the worksheet and record. The final value must be within the end play limits give on the upper bearing end play table, table 6 or the assembly must be reworked.

III **ASSEMBLE THE LOWER JOURNAL HOUSING SUB-ASSEMBLY.**

6.0 There are three types of lower journal housing sub-assemblies available. Select the correct assembly procedure for your type, Items 6.1, 6.2, or 6.3.

6.1 Grinding roll with lock nut (taper fit connection).

6.1.1 Use Prussian blue to determine the contact pattern between the lower housing taper and the grinding roll taper. There must be at least 80% contact between the mating tapers and any no contact zones must not exceed 10 ° of arc. Modify the roll to achieve proper contact.

COPYRIGHT AND CONFIDENTIAL
The information on this document is the property of BHARAT HEAVY ELECTRICALS LIMITED,
It must not be used directly or indirectly in any way detrimental to the interest of the company.

6.1.2 Once the taper contact has been verified, press the grinding roll and lower housing together with 50 tons force.

6.1.3 Tighten the locknut on the lower housing while maintaining the 50 ton force.

6.1.4 Spot drill the grinding roll through the set screw holes.

6.1.5 Install the cone point set screws with Loctite 271 or equal and torque to 50 ft- lbs (6.9 kgm).

6.1.6 Use a pipe thread sealant, install the 1” hex socket pipe plug in the oil drain hole in the lower housing and stake in two places.

6.2 Grinding roll with keeper plate (Shrink fit connection reference figure 1 and 3 and Record sheet, Fig. 8.

6.2.1 Measure the grinding roll bore (B AVG) and the lower bearing housing outside diameter (F AVG). subtract B AVG from F AVG, the interference must be between 0.001” to 0.009” (0.254 mm to 0.2286mm) or the parts must be rejected, that is mated with other components.

6.2.2 Heat the grinding roll evenly to 250 ° F (120 °C) maximum, use an oven if practicable. Check roll temperature continuously with thermocouples or temperature sticks to ensure roll is heated evenly.

6.2.3 Lower the roll on the lower housing. Make sure the outside roll taper is in the correct direction.

6.2.4 Install the keeper plate and bolts. Torque the bolts to 50 ft-lbs (6.9 kgm) to seat the roll against the housing shoulder.

6.2.5 Allow the roll and housing to return to room temperature than remove the keeper plates and bolts. Measure from the roll face to the housing face with a depth micrometer in six places, reference figure 9. Average the measurements.

6.2.6 Prepare a shim pack 0.003” to 0.005” (0.0762 mm to 0.127 mm) less than the value measured in step 6.2.5. check shim pack with a micrometer.

6.2.7 Position shim pack and keeper plates.

6.2.8 Install bolts with a locking/ sealant and torque per Figure 5. Tack weld the bolt heads to the keeper plate.

COPYRIGHT AND CONFIDENTIAL
The information on this document is the property of BHARAT HEAVY ELECTRICALS LIMITED,
It must not be used directly or indirectly in any way detrimental to the interest of the company.

6.3 Grinding roll with keeper plates (taper fit connection)

6.3.1 Use Prussian blue to determine the contact pattern between the lower housing taper and the grinding roll taper. There must be at least 80% contact between the mating tapers and any no contact zones must not exceed 10 ° of arc. Modify the roll to achieve proper contact.

6.3.2 Once the taper contract has been verified, install the grinding roll on the housing. Measure and record the gap between the end face of the roll and the end face of the housing. Reference Figure 9.

6.3.3 Prepare a shim pack 0.005” to 0.007” less than gap measured in step 6.3.2. Install shim pack, keeper plate and cap screws. Torque cap screws to the value given on the assembly drawing.

6.3.4 Remove the cap screws, keeper plates and shim packs. Remeasure gap (step 6.3.2) noting any change. If gap has changed more than 0.002” (0.051 mm) repeat step 6.3.3 preparing a shim pack based on the new gap. Repeat until gap no longer changes after bolts are torque.

6.3.5 Prepare a shim pack of 0.003” to 0.005” (0.076 to 0.127 mm) less than final gap. Install shim pack, keeper plate and cap screws. Torque cap screws to the value given on the assembly drawing and tack weld to the keeper plates.

7.0 Install the lower journal bearing cup.

7.1 Using procedures on Figure 1, measure the lower journal housing bearing and pilot bores and record the measurements on Figure 10. Take measurements at the top and bottom of each bore. All the measurements for a given bore must be alike within 0.001” (0.0254 mm) T.I.R. (Calculate the average bore diameter.

7.2 Measure the O.D of the lower journal-bearing cup, reference procedures on Figure-3. Record on figure 10.

7.3 Calculate the bearing housing interference, F^3 AVG minus DB. It must be between 0.001” and 0.007” (0.025 and 0.178 mm)

7.4 Coat the lower journal housing bearing bore with Molykote 41 or equal.

7.5 Chill the lower bearing cup in dry ice or liquid nitrogen and install in lower housing.

COPYRIGHT AND CONFIDENTIAL
The information on this document is the property of BHARAT HEAVY ELECTRICALS LIMITED,
It must not be used directly or indirectly in any way detrimental to the interest of the company.

CAUTION.

AS THE BEARING CUP RETURNS TO NORMAL TEMPERATURE. WIPE DRY AND COAT WITH JOURNAL OIL TO PREVENT WATER ETCHING.

7.6 After the cup has returned to room temperature, check beneath the cup with a feeler gauge to assure proper seating. A 0.001" (0.025 mm) feeler gauge must not fit between the bearing cup and the housing backing shoulder.

IV **JOURNAL SHAFT SUB-ASSEMBLY**:

NOTE

Journals are supplied with two different styles of journal shaft, shafts with a long spacer between the upper and lower bearings and shafts with a large shaft diameter between the upper and lower bearings. Journal shaft sub-assembly and housing assembly techniques are different for the two styles.

8.0 Check the journal shaft for straightness and roundness. Measure and record the information, reference Figure 11. The shaft must be straight and round within 0.001" (0.025mm).

9.0 Assembly of long spacer shaft journals.

9.1. Install the oil seal wear ring.

9.1.1. Measure the I.D of the oil seal wear ring, reference procedures on Figure 1 compare with shaft O.D. measurements, N. recorded on figure 11. The interference must be between 0.004 " and 0.011". (0.102 to 0.28 mm)

9.1.2. Heat oil seal wear in an oven or in oil to 300 ° F maximum.

9.1.3 Locate oil seal wear ring on journal shaft as shown in the assembly drawing (either by a given dimension or against a shaft shoulder). Allow wear ring to cool.

9.2 Install the upper bearing assembly.

9.2.1 Lubricate the upper journal-bearing seat on the journal shaft with standard journal oil.

9.2.2 Install one oil seal facing inward into the upper journal housing and then the remaining two with the lip pointing outward. Coat the seal lips and fill the cavities between the seals with Molykote 33 or equal grease.

COPYRIGHT AND CONFIDENTIAL
The information on this document is the property of BHARAT HEAVY ELECTRICALS LIMITED,
It must not be used directly or indirectly in any way detrimental to the interest of the company.

CAUTION

AVOID MARRING THE SHAFT BLENDED RADIUS FINISH OR DAMAGING THE OIL SEAL DURING ASSEMBLY.

9.2.3 Assemble the upper bearing and housing on the journal shaft. A clearance or 0.002" to 0.004" should exist between the shaft and the upper bearing (0.051 to 0.102 mm)

9.2.4 Slip the journal-bearing sleeve (long spacer) onto the journal shaft. The bearing spacer is marked so that the slots are assembled toward the lower bearing.

9.3. Install the lower journal-bearing cone.

9.3.1 Assemble the lower bearing spacer (if applicable) on the journal shaft. The Chamfer on the spacer must clear the shaft fillet.

9.3.2 Coat the lower bearing seat on the journal shaft with Molykote 41 or equal.

9.3.3. Check the I.D of the bearing cone, use procedure Figure 1 and compare with shaft measurement K, Figure 11. The interference must be between 0.001" and 0.007" (0.025 to 0.178 mm)

9.3.4 Heat the bearing cone in an oven or oil bath to 250 ° F (120 ° C) maximum and install it on the journal shaft.

9.3.5 Install the bearing keeper and torque cap screws to 100 ft.lbs (14 kgm)

9.3.6 Allow bearing to return to room temperature.

9.3.7 Check with a feeler gauge to assure proper seating of the bearing. A 0.001" (0.025 mm) feeler gauge must not fit between the bearing spacer and cone or the shaft and cone.

9.4 Install bearing keeper and shim assembly.

9.4.1. Remove cap screws and journal bearing keeper.

9.4.2. Measure the gap between the shaft end and the bearing face with a depth, micrometer in four places. Reference figure 4. Average the readings.

9.4.3. Prepare a shim pack with a total thickness of 0.003" to 0.005" (0.076 to 0.127 mm) less than the average gap measured in step 9.4.2 Check Shims with a micrometer.

COPYRIGHT AND CONFIDENTIAL
The information on this document is the property of BHARAT HEAVY ELECTRICALS LIMITED,
It must not be used directly or indirectly in any way detrimental to the interest of the company.

9.4.4. Assemble shim pack, keeper plate, lock plate and cap screws to the journal shaft. Torque cap screws per Figure 5.

9.4.5. Bend the lock plate against the nearest flat on the cap screws. Go to procedure V.

10. Assembly of large diameter shaft journals.

10.1 Install the lower bearing cone.

10.1.1. Coat the lower bearing seat on the journal shaft with Molykote 41 or equal.

10.1.2 Check the I.D of the bearing cone use procedures Figure 1 and compare with the shaft measurement K. Figure 11. The interference must be between 0.001” and 0.007” (0.025 to 0.178mm)

10.1.3 Install the lower bearing cone on the journal shaft after heating it in an oven or oil bath to 250 ° F maximum (120 ° C)

10.1.4 Install the bearing keeper and torque cap screws to 100 ft lbs (14 kgm).

10.1.5 Allow lower bearing cone assembly to return to room temperature.

10.1.6 Check with a feeler gauge to assure proper seating of the bearing. A 0.001” (0.025mm) feeler gauge must not fit between the shaft shoulder and the bearing cone.

10.2 Install bearing keeper and shim assembly.

10.2.1 Remove the cap screws and journal bearing keeper.

10.2.2 Measure the gap between the shaft end and the bearing face with depth micrometer in four places. Reference Figure 4. Average the readings.

10.2.3 Prepare a shim pack with a total thickness of 0.003” to 0.005” (0.076 to 0.127 mm) less than the average gap measured in step 10.2.2. Check shims with a micrometer.

10.2.4 Assemble shim pack, keeper plate, lock plate and cap screws to the journal shaft. Torque cap screws per Figure 5.

10.2.5 Bend the lock plate against the nearest flat on the cap screws. Go to procedure V.

COPYRIGHT AND CONFIDENTIAL
The information on this document is the property of BHARAT HEAVY ELECTRICALS LIMITED,
It must not be used directly or indirectly in any way detrimental to the interest of the company.

V **ASSEMBLY THE JOURNAL SHAFT TO THE HOUSING ASSEMBLIES, CHECK JOURNAL ASSEMBLY END PLAY**

11.0 Journal shaft and housing sub-assemblies.

NOTE

Prior to assembly coat all bearings with standard journal oil.

11.1 Install a lifting eye in the end of the journal shaft.

11.2 On Journal shafts with the long spacer, lower journal shaft and upper housing assembly without the "O" ring or the spring pins into the lower housing and seat the lower bearing cone in its cup.

11.3. On large diameter shaft journals, lower the journal shaft sub-assembly into the lower housing and seat the lower bearing cone in its cup. Install the bearing spacer on shaft, if applicable, then lower the upper housing sub-assembly, without the "O" ring or spring pins, over the shaft and into the lower housing.

11.4 Turn the shaft five complete revolutions in one direction.

11.5.Measure the gap between the upper and lower journal housing flanges in eight places. 45° increments, with feeler gauges. Record the reading, reference Figure 12. All readings should be alike within 0.003" . (0.076 mm) Average the readings.

11.6. Refer to item 5.0, Figure 6 and the assembly End Play Table, Table 6. Prepare a shim pack with a thickness equal to the average housing gap, step 11.5, plus ½ the end play of the two row upper bearing, Figure 6, plus value "A" from the Assembly End Play Table, Table 6. Check the shim pack with a micrometer.

11.7. Remove the journal shaft and upper housing assembly (or the upper housing sub-assembly) from the lower housing.

11.8. Install the "O" ring in the upper housing groove and grease lightly with Molykote 33 or equal. Install the spring pins in the lower housing.

11.9.Re-assemble the lower housing, shaft assembly and upper housing with the prepared shim stack. Do not pinch the "O" ring.

11.0 Apply loctite 277 or equal to the hex socket head cap screw threads. Install cap screws and torque to assembly drawing specifications.

COPYRIGHT AND CONFIDENTIAL
The information on this document is the property of BHARAT HEAVY ELECTRICALS LIMITED,
It must not be used directly or indirectly in any way detrimental to the interest of the company.

12.0 Check Journal assembly bearing end play.

12.1 Fasten two rods threaded at their lower ends in the lifting holes in the flange of the upper journal housing.

12.2 Lock the rods with hex nuts.

12.3. Install a dial indicator on each rod. Mark the indicator locations (180º apart) on the top of the journal shaft.

12.4. Rotate the journal five revolutions in one direction and return the dial indicators to their marked locations.

12.5. Zero the indicators.

12.6. Use a come-along and a five ton load cell, carefully lift the journal shaft to the lift load given in Table 6 .

12.7. Rotate the shaft at least five revolutions in one direction and return the dial indicators to their original position.

12.8. Record the two indicator readings. Refer to Figure 13.

12.9. Lower the shaft to zero load on the load cell.

12.10. Rotate the journal shaft atleast five revolutions in one direction and return the dial indicators to their original position. Record the indicator readings.

12.11. If both indicators have returned to zero ± 0.005” (± 0.0127 mm) in step 12.10 average the readings take in step 12.8 and record.

12.12. Zero the dial indicators and repeat steps 12.6 through 12.11 until three average indicator readings, within 0.001” (0.025 mm) are obtained.

12.13. Average the three average readings.

12.14. The value obtained in step 12.13 should be ½ the end play of the two row bearing, Figure 6, plus value “A” from the Assembly End Play Table, Table 6 . The acceptable tolerance is ± 0.001” (± 0.025 mm).

12.15 If the journal assembly and play is not within acceptable limits, disassemble the housing, and adjust shims (steps 11.4 through 11.10) as required. After shims are adjusted, recheck journal assembly end play by repeating steps 12.1 through 12.14.

12.16 If the journal assembly end play is within the acceptable limits, remove the rods installed in step 12.1 and plug the lifting and jack screw holes in the upper journal bearing with set screws.

COPYRIGHT AND CONFIDENTIAL
The information on this document is the property of BHARAT HEAVY ELECTRICALS LIMITED,
It must not be used directly or indirectly in any way detrimental to the interest of the company.

COPYRIGHT AND CONFIDENTIAL
The information on this document is the property of BHARAT HEAVY ELECTRICALS LIMITED,
It must not be used directly or indirectly in any way detrimental to the interest of the company.

TABLE -1

				SPACER GRINDING VALUES		SPACER GRINDING VALUES	
HOUSING BORE (INCHE)		HOUSING BORE (MM)		TIMKEN		TORRINGTON	
				INCH	MM	INCH	MM
11.3700	11.3702	288.798	288.804	0.000	0.000	0.000	0.000
11.3703	11.3705	288.805	288.812	0.001	0.025	0.001	0.025
11.3706	11.3708	288.813	288.819	0.002	0.051	0.002	0.051
11.3709	11.3711	288.820	288.827	0.003	0.076	0.003	0.076
11.3712	11.3714	288.828	288.835	0.004	0.102	0.004	0.102
11.3715	11.3717	288.836	288.842	0.005	0.127	0.005	0.127
11.3718	11.3720	288.843	288.849	0.006	0.152	0.006	0.152

Spacer grinding Dimensions
Double upper bearing journals (Refer to figure 2)
643-663 pulverisers Upper journal housing P/N GP – 3325
Upper journal bearing P/N GP-3339

COPYRIGHT AND CONFIDENTIAL
The information on this document is the property of BHARAT HEAVY ELECTRICALS LIMITED,
It must not be used directly or indirectly in any way detrimental to the interest of the company.

TABLE -2

HOUSING BORE (INCH)		HOUSING BORE (MM)		SPACER GRINDING VALUES (INCHE)			
				TIMKEN		TORRINGTON	
				INCH	MM	INCH	MM
13.2450	13.2452	336.423	336.429	0.000	0.000	0.000	0.000
13.2453	13.2455	336.430	336.437	0.001	0.025	0.001	0.025
13.2456	13.2458	336.438	336.444	0.002	0.051	0.002	0.051
13.2459	13.2461	336.445	336.452	0.003	0.076	0.003	0.076
13.2462	13.2464	336.453	336.460	0.004	0.102	0.004	0.102
13.2465	13.2467	336.461	336.467	0.005	0.127	0.005	0.127
13.2468	13.2470	336.468	336.474	0.006	0.152	0.006	0.152

Spacer grinding dimensions.
Double upper bearing journals (Refer to figure 2)

683-743 Pulverisers – Upper journal housing P/N GP – 3988
Upper journal bearing P/N GP – 2908
763-803 Pulverisers – Upper journal housing P/N GP-3971
Upper journal bearing P/N GP – 2908
823-863 Pulverisers - Upper journal housing P/N GP – 922
Upper journal bearing P/N GP - 2908

COPYRIGHT AND CONFIDENTIAL
The information on this document is the property of BHARAT HEAVY ELECTRICALS LIMITED,
It must not be used directly or indirectly in any way detrimental to the interest of the company.

TABLE -3

HOUSING BORE (INCH)		HOUSING BORE (MM)		SPACER GRINDING VALUES (INCHE)			
				TIMKEN		TORRINGTON	
				INCH	MM	INCH	MM
15.1200	15.1202	384.046	384.054	0.000	0.000	0.000	0.000
15.1203	15.1205	384.055	384.062	0.001	0.025	0.001	0.025
15.1206	15.1208	384.063	384.069	0.002	0.051	0.002	0.051
15.1209	15.1211	384.070	384.077	0.003	0.076	0.003	0.076
15.1212	15.1214	384.078	384.085	0.004	0.102	0.004	0.102
15.1215	15.1217	384.086	384.092	0.005	0.127	0.005	0.127
15.1218	15.1220	384.093	384.099	0.006	0.152	0.006	0.152

Spacer grinding dimensions.
Double Upper Bearing Journals (Refer to figure 2)
883-943 Pulverisers Upper Journal Housing P/N GP – 3067
Upper Journal Bearing P/N GP – 3064.

COPYRIGHT AND CONFIDENTIAL
The information on this document is the property of BHARAT HEAVY ELECTRICALS LIMITED,
It must not be used directly or indirectly in any way detrimental to the interest of the company.

TABLE -4A

HOUSING BORE (INCHE)		HOUSING BORE (MM)		SPACER OR VALUES TIMKEN	
				INCH	MM
15.9950	15.9952	406.273	406.279	0.000	0.000
15.9953	15.9955	406.280	406.287	0.001	0.025
15.9956	15.9958	406.288	406.294	0.002	0.051
15.9959	15.9961	406.295	406.302	0.003	0.076
15.9962	15.9964	406.303	406.310	0.004	0.102
15.9965	15.9967	406.311	406.316	0.005	0.127
15.9968	15.9970	406.317	406.324	0.006	0.152

COPYRIGHT AND CONFIDENTIAL
The information on this document is the property of BHARAT HEAVY ELECTRICALS LIMITED,
It must not be used directly or indirectly in any way detrimental to the interest of the company.

TABLE -4B

HOUSING BORE		HOUSING BORE		SPACER OR VALUES TORRINGTON	
INCH	MM	INCH	MM	INCH	MM
15.9950	15.9952	406.273	406.279	0.000	0.000
15.9953	15.9954	406.280	406.284	0.001	0.025
15.9955	15.9956	406.285	406.289	0.002	0.051
15.9957	15.9958	406.290	406.294	0.003	0.076
15.9959	15.9960	406.295	406.299	0.004	0.102
15.9961	15.9962	406.300	406.305	0.005	0.127
15.9963	15.9964	406.306	406.310	0.006	0.152
15.9965	15.9966	406.311	406.315	0.007	0.127
15.9967	15.9968	406.316	406.320	0.008	0.203
15.9969	15.9970	406.321	406.324	0.009	0.229

Spacer Grinding Dimensions.
Double upper bearing journals (Refer to figure 2)
883 – 943 Pulverisers – Upper Journal Housing P/N 94 – 852
Upper Journal Bearing P/N GP – 2484
963-1003 Pulverisers - Upper Journal Housing P/N 101-00971
Upper Journal Bearing P/N GP – 2484.

COPYRIGHT AND CONFIDENTIAL
The information on this document is the property of BHARAT HEAVY ELECTRICALS LIMITED,
It must not be used directly or indirectly in any way detrimental to the interest of the company.

TABLE -5A

HOUSING BORE (INCHE)		HOUSING BORE (MM)		SPACER GRINDING VALUES			
				TIMKEN		TORRINGTON	
				INCH	MMS	INCH	MMS
17.9950	17.9952	457.073	457.079	0.000	0.000	0.000	0.000
17.9953	17.9955	457.080	457.087	0.001	0.025	0.001	0.025
17.9956	17.9958	457.088	457.094	0.002	0.051	0.002	0.051
17.9959	17.9961	457.095	457.102	0.003	0.076	0.003	0.076
17.9962	17.9964	457.103	457.110	0.004	0.102	0.004	0.102
17.9965	17.9967	457.111	457.117	0.005	0.107	0.005	0.127
17.9968	17.9970	457.118	457.124	0.006	0.152	0.006	0.152

Spacer Grinding Dimensions.
Double Upper Bearing Journals (Refer to figure -2)

963 -1003 Pulverisers Upper Journal Housing P/N 101-01081
Upper Journal Bearing P/N GP -1668

1023-1103 Pulverisers Upper Journal Housing P/N 111-00667
Upper Journal Bearing P/N GP -1668.

COPYRIGHT AND CONFIDENTIAL
The information on this document is the property of BHARAT HEAVY ELECTRICALS LIMITED,
It must not be used directly or indirectly in any way detrimental to the interest of the company.

TABLE -5B

HOUSING BORE (INCHE)		HOUSING BORE (MM)		SPACER GRINDING VALUES (INCHE)			
				TIMKEN		TORRINGTON	
				INCH	MM	INCH	MM
17.9950	17.9952	457.073	457.079	0.000	0.000	0.000	0.000
17.9953	17.9955	457.080	457.087	0.001	0.025	0.001	0.025
17.9956	17.9958	457.088	457.094	0.002	0.051	0.002	0.051
17.9959	17.9961	457.095	457.102	0.003	0.076	0.003	0.076
17.9962	17.9964	457.103	457.110	0.004	0.102	0.004	0.102
17.9965	17.9967	457.111	457.117	0.005	0.127	0.005	0.127
17.9968	17.9970	457.118	457.124	0.006	0.152	0.006	0.152

Spacer Grinding Dimensions.
Double Upper Bearing Journals (Refer to figure 2)

883 -1003 Pulverisers Upper journal housing P/N GP – 3810
Upper journal bearing P/N GP-1668.

1023-1103 Pulverisers Upper journal housing P/N 101 -00760
Upper journal bearing P/N GP – 1668.

COPYRIGHT AND CONFIDENTIAL
The information on this document is the property of BHARAT HEAVY ELECTRICALS LIMITED,
It must not be used directly or indirectly in any way detrimental to the interest of the company.

USAGE

When using this table ensure that the upper bearing and upper housing part number you are working with match those listed in the table.

The lift load in column 4 is used in determining upper bearing end play described in steps 5.1 through 5.12. The results obtained in step 5.12 should be compared with the values for the end play tolerance in column 5.

The values in column 7 are used in determining journal housing flange gap shims 11.5 and 11.6 and figure 12 and journal assembly end play steps 12.6 through 12.14 and figure 13.

Use the lift load values in column 6 in determining the journal assembly end play 12.6 through 12.14 and figure 13.

COPYRIGHT AND CONFIDENTIAL
The information on this document is the property of BHARAT HEAVY ELECTRICALS LIMITED,
It must not be used directly or indirectly in any way detrimental to the interest of the company.

TABLE -6

MILL SIZE	UPPER BEARING P/N	UPPER HOU-SING P/N	UPPER BEARING (REFER TO FIG 6)				JOURNAL ASSEMBLY			
			LIFT(1b)	LOAD (KG)	END PLAY (INCH)	END PLAY CE (MM)	LIFT (1b)	LOAD (KG)	END PLAY	
									INCH	MM
663 & 703	GP-3339	GP-3325	900	410	0.001-0.005	0.025-0.127	1100	500	0.004	0.102
HP 703	GP-2908	GP-3988	1800	817	0.002-0.006	0.051-0.152	1900	862	0.004	0.102
HP-803	GP-2908	GP-3971	1900	862	0.002-0.006	0.051-0.152	2400	1090	0.004	0.102
883-943	GP-2484	94-852	2200	997	0.002-0.006	0.051-0.152	2200	998	0.005	0.127
963-1003	GP-1668	101-01081	4000	1815	0.005-0.009	0.127-0.229	2200	998	0.006	0.152
XRP 1043 - 1103	GP-1668	110-00760	4400	1996	0.005-0.009	0.127-0.229	2200	998	0.006	0.152

COPYRIGHT AND CONFIDENTIAL
The information on this document is the property of BHARAT HEAVY ELECTRICALS LIMITED,
It must not be used directly or indirectly in any way detrimental to the interest of the company.

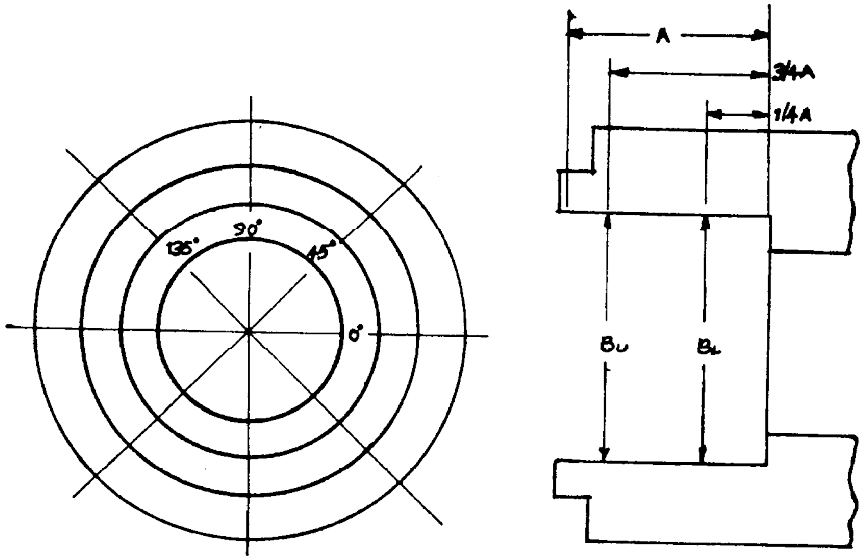

1. Use dial bore to determine bore dimensions.
2. Measure at two depths, 1/4A and 3/4A, on 45° increments, a equals the bearing length or bore depth which ever is smallest.
3. Record readings, B_U and B_L on the table below. All measurements must agree within 0.001" TIR (0.0254 mm TIR).
4. Average the upper, lower and total bore dimension Cu, CL. The average reading D must meet blue print specifications, that is base dimension + 0.002" / 0.000". (+0.051/0.000mm)

ORIENTATION	B_U UPPER DIMNS.	B_L LOWER. DIMNS.	AVERAGE
O°			
45°			
90°			
135°			
$\frac{B_0 + B_{45} + B_{90} + B_{135}}{4}$	C_U	C_L	
$\frac{C_U + C_L}{2}$			

FIGURE:1

COPYRIGHT AND CONFIDENTIAL
The information on this document is the property of BHARAT HEAVY ELECTRICALS LIMITED,
It must not be used directly or indirectly in any way detrimental to the interest of the company.

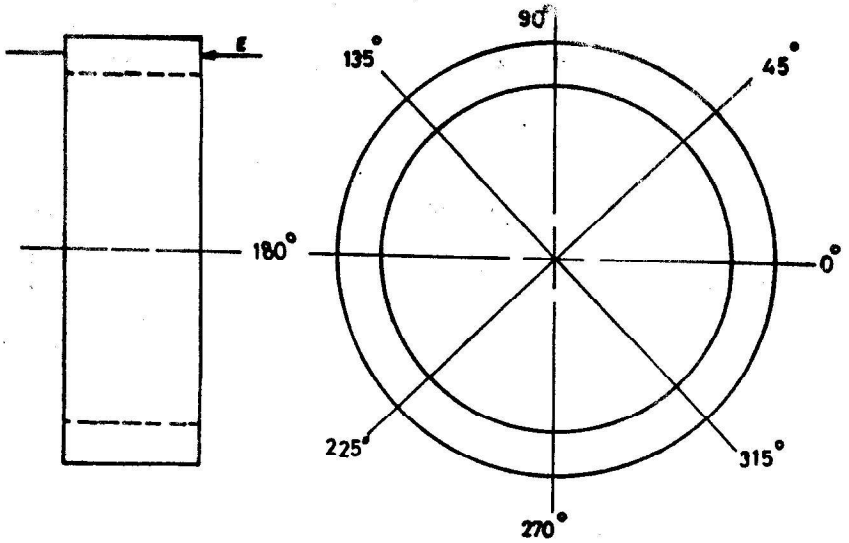

1. Use a micrometer to measure spacer length "E" at eight locations on 45° intervals prior to grinding.
2. Record and average readings.
3. Grind the spacer, remove material per tables-1-5.
4. Remeasure ground spacer, record and average readings.

OIRENTATION	DIMENSION E-NEW	DIMENSION E-GROUND
0°		
45°		
90°		
135°		
180°		
225°		
270°		
315°		
E. AVG..	E_{NEW} =	E_{GROUND} =

$$E_{AVG} = \frac{E_0 + E_{45} + E_{90} + E_{135} + E_{180} + E_{225} + E_{270} + E_{315}}{8}$$

Figure – 2: Journal Bearing Spacer Length Determination&Fig.A-3 for Avg.

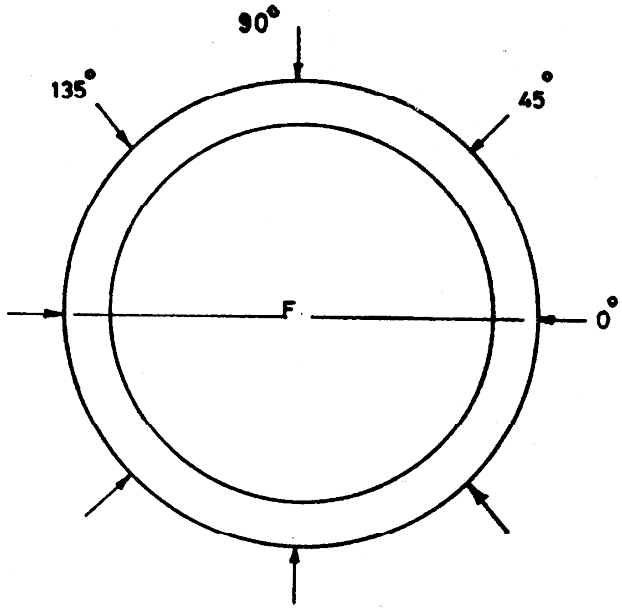

1. Use a micrometer to measure the outside diameter of the brg. cups at four locations 0°, 45°, 90°, and 135°.
2. Record readings on the table below, all dimensions must agree within 0.001" TIR (0.025mm).
3. Average the dimensions for comparison with bore dimension "D" Fig. 1.

ORIENTATION	BRG. 1 DIMENSION	BRG. 2 DIMENSION
0°		
45°		
90°		
135°		
F AVG	F^1 AVG =	F^2 AVG =

$$FAVG = \frac{F_0 + F_{45} + F_{90} + F_{135}}{4}$$

Figure. 3: Journal Bearing Outside Diameter&FigA-2 of Annexure.

COPYRIGHT AND CONFIDENTIAL
The information on this document is the property of BHARAT HEAVY ELECTRICALS LIMITED,
It must not be used directly or indirectly in any way detrimental to the interest of the company.

COPYRIGHT AND CONFIDENTIAL
The information on this document is the property of BHARAT HEAVY ELECTRICALS LIMITED,
It must not be used directly or indirectly in any way detrimental to the interest of the company.

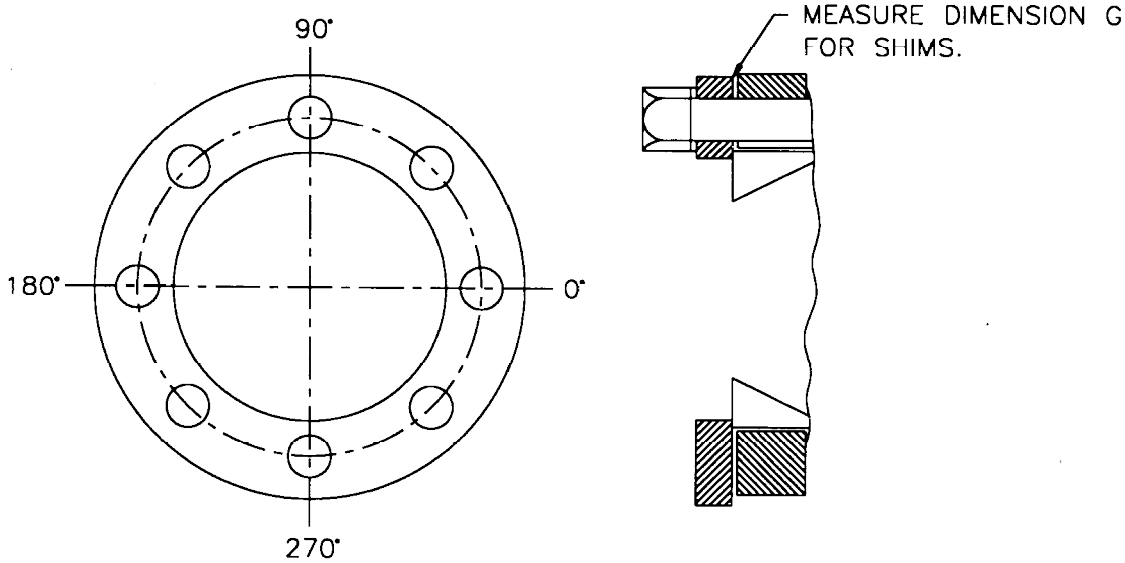

1. Measure clearance between the bearing housing and bearing keeper with a feeler gauge at four locations.
2. Record measurements on table below:
3. Calculate average gap measurement.

ORIENTATION	DIMENSION "G"
0°	
90°	
180°	
270°	
$G_{AVG} = \frac{G_0 + G_{90} + G_{180} + G_{270}}{4}$	

Figure.4. Bearing Keeper Shim Pack.

SIZE	GRADE (SAE)	TORQUE (FT-LB)
1/4" X 20	2	6
	5	10
	7	13
	8	14
5/16" X 18	2	12
	5	19
	7	25
	8	29
3/8" X 16	2	20
	5	33
	7	44
	8	47
1/2" X 13	2	47
	5	78
	7	110
	8	119
5/8" X 11	2	96
	5	154
	7	215
	8	230
3/4" X 10	2	155
	5	257
	7	360
	8	380
7/8" X 9	2	206
	5	382
	7	570
	8	600
1" X 8	2	310
	5	587
	7	840
	8	900
1 1/8" X 7	2	480
	5	794
	7	1325
	8	1430

COPYRIGHT AND CONFIDENTIAL
The information on this document is the property of BHARAT HEAVY ELECTRICALS LIMITED,
It must not be used directly or indirectly in any way detrimental to the interest of the company.

1 1/4" X 7	2	675
	5	1105
	7	1825
	8	1975
1 3/8" X 6	2	900
	5	1500
	7	2500
	8	2650
1 1/2" X 6	2	1100
	5	1775
	7	3000
	8	3200
1 3/4" X 5	2	1900
	5	3150
	7	5300
	8	5650
2" X 4 1/2	2	2750
	5	4550
	7	7500
	8	8200

COPYRIGHT AND CONFIDENTIAL
The information on this document is the property of BHARAT HEAVY ELECTRICALS LIMITED,
It must not be used directly or indirectly in any way detrimental to the interest of the company.

COPYRIGHT AND CONFIDENTIAL
The information on this document is the property of BHARAT HEAVY ELECTRICALS LIMITED,
It must not be used directly or indirectly in any way detrimental to the interest of the company.

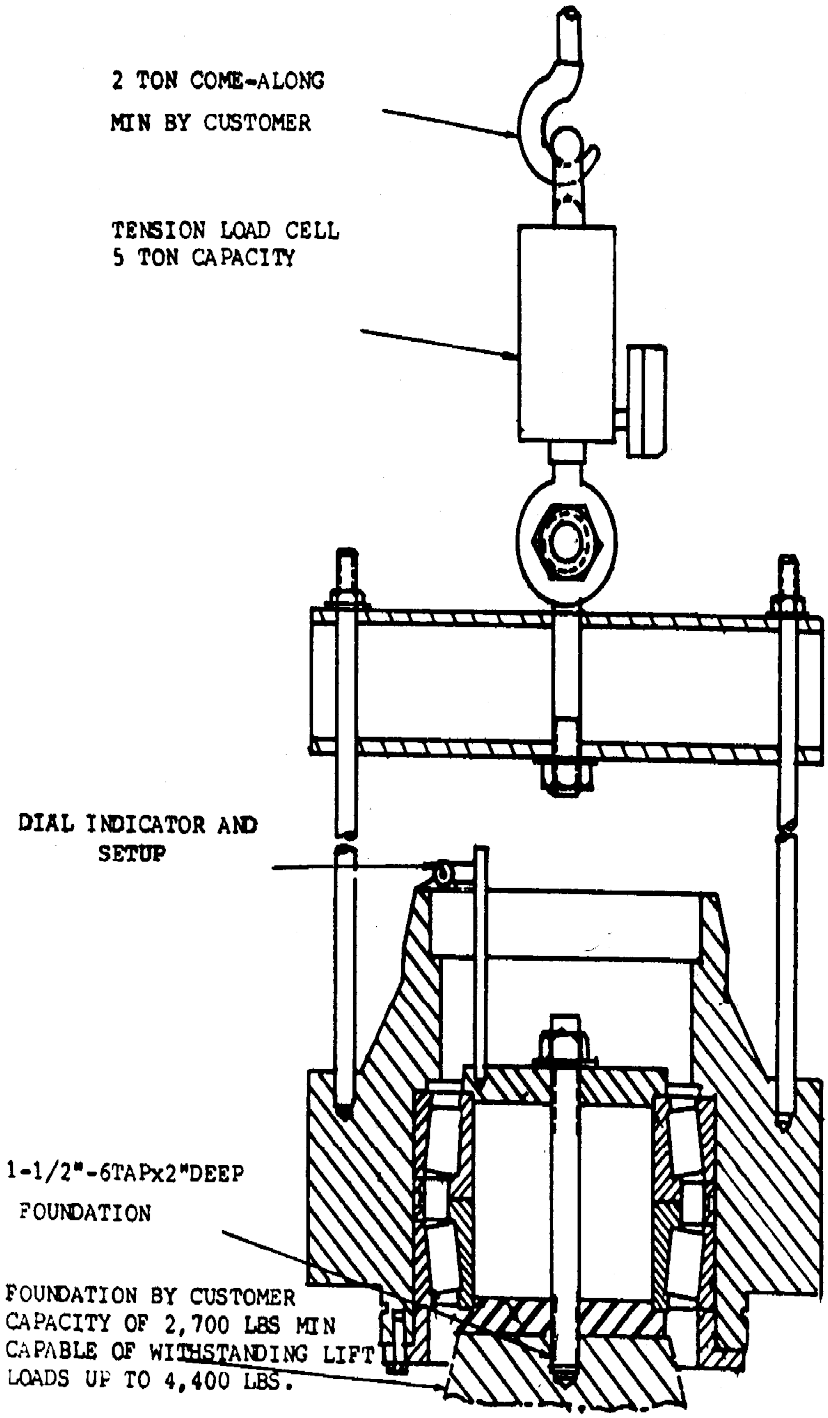

FIG-6 End Play fixture.

COPYRIGHT AND CONFIDENTIAL
The information on this document is the property of BHARAT HEAVY ELECTRICALS LIMITED,
It must not be used directly or indirectly in any way detrimental to the interest of the company.

Trial	Indicator	Indicator Readings			AVG. Readings
		No Load	Lifted	No Load	Lifted Position
1	A		H_A		H^1 AVG. = $\frac{H_A+H_B+H_C}{3}$
	B		H_B		
	C		H_C		
2	A		H_A		H^2 AVG =
	B		H_B		
	C		H_C		
3	A		H_A		H^3AVG =
	B		H_B		
	C		H_C		
4	A		H_A		H^4AVG =
	B		H_B		
	C		H_C		
5	A		H_A		H^5AVG =
	B		H_B		
	C		H_C		

$$H_{AVG} = \frac{H1AVG + \quad + HX_{AVG}}{X}$$

Note: Refer to Procedures in Text, items 5.5 to 5.10

Figure: 7 Upper Bearing End Play

ORIENTATION	B^U = UPP.DIMNS	B^L = LWR DIMNS.	AVERAGE
0º			
45º			
90º			
135º			
$\frac{B_0+B_{45}+B_{90}+B_{135}}{4}$	B^UAVG	B^LAVG	
$B_{AVG}= \frac{B^U AVG+ B^L AVG}{2}$			B_{AVG}

Roll Bore (Reference figure -1)

ORIENTATION	F_u = UPP.DIMNS	F^L = LWR DIMNS.	AVERAGE
0º			
45º			
90º			
135º			
$\frac{F_0+F_{45}+F_{90}+F_{135}}{4}$	F^UAVG	F^LAVG	
$F_{AVG}= \frac{F^U AVG+ F^L AVG}{2}$			F_{AVG}

Bearing Housing Outside Diameter (Reference figure -3)

INTEREFERENCE = F_{AVG}- B_{AVG} =

NOTE: THE INTEREFERENCES MUST BE AT LEAST 0.001” (.0.025mm)
AND LESS THAN 0.009” (0.229mm)

FIGURE 8. ROLL/BEARING HOUSING INTEREFERENCE.

COPYRIGHT AND CONFIDENTIAL
The information on this document is the property of BHARAT HEAVY ELECTRICALS LIMITED,
It must not be used directly or indirectly in any way detrimental to the interest of the company.

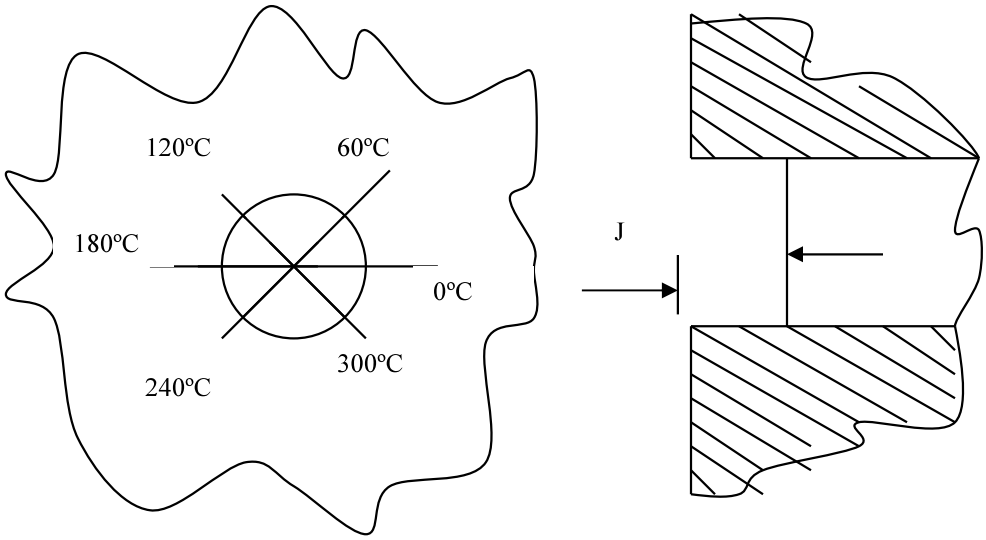

1. USE A DEPTH MICROMETR TO MEASURE "J" AT SIX LOCATIONS.
2. RECORD J3, CALCULATE "J" AVG.

LOCATION	J DIMENSION			
	1ST TRIAL	2ND TRIAL	3RD TRAIL	4TH TRAIL
0º				
60º				
120º				
180º				
240°				
300°				
$\frac{J_0+J_{60}+J_{120}+J_{180}+J_{240}+J_{300}}{6}$	$J1_{AVG}$ =	$J2_{AVG}$ =	$J3_{AVG}$ =	$J4_{AVG}$ =

SHIM PACK = J_{AVG} - 0.005"

SHIM PACK mm = J_{AVG} – 0.127 mm

COPYRIGHT AND CONFIDENTIAL
The information on this document is the property of BHARAT HEAVY ELECTRICALS LIMITED,
It must not be used directly or indirectly in any way detrimental to the interest of the company.

FIGURE 9 ROLL BEARING HOUSING SHIM PACK.

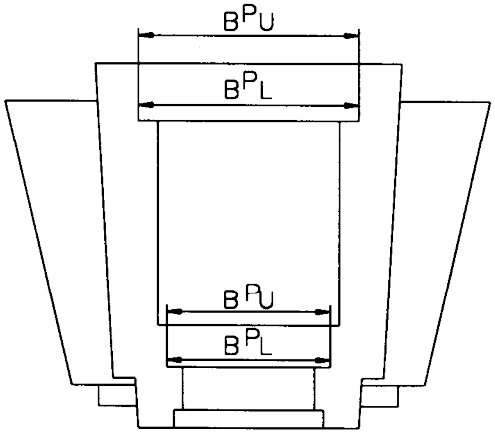

Note:

For Bore determination use procedures Figure 1:

For Bearing O.D. use procedure Figure 3.

ORIENTATION	BRG. BORE B^BL B^BU	PILOT BORE B^PL B^PU	LWR. BRG. CUP F^3 OUTSIDE DIM
0°			
45°			
90°			
135°			
$\frac{B_0+B_{45}+B_{90}+B_{135}}{4}$	$C^B L = C^B U =$	$C^P L = C^P U =$	F^3 AVG =
$\frac{C_L + C_U}{2}$	$D^B =$	$D^P =$	

$$F^3_{AVG} = \frac{F_0 + F_{45} + F_{90} + F_{135}}{4}$$

Bearing/ Bore Interference $= F^3_{AVG} - D^B =$ _____

Figure-10: Lower Journal Housing Bore Dimensions & Interference.

COPYRIGHT AND CONFIDENTIAL
The information on this document is the property of BHARAT HEAVY ELECTRICALS LIMITED,
It must not be used directly or indirectly in any way detrimental to the interest of the company.

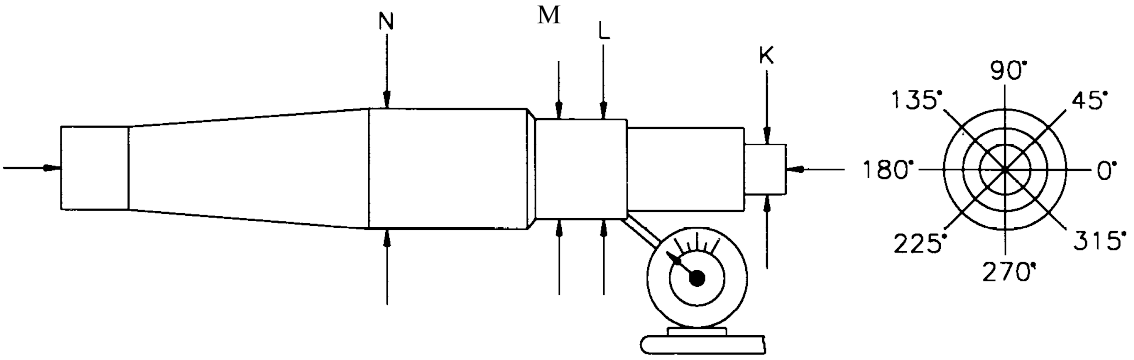

Shaft Outside Diameter Measurement. Use a Micrometer.

ORIENTATION	L.R. BRG. SEAT	UPP. BRG. SEAT		SEAL RING SEG
	K	L	M	N
0°				
45°				
90°				
135°				
AVG = $\frac{0+45+90+135}{4}$				

Shaft straightness measurements, mount shaft on live centers & use a dial indicator to check at K, L, M & N. Dial indicator reading should not vary more than 0.001" (0.025mm) for out of round.

ORIENTATION	K	L	M	N
0°				
45°				
90°				
135°				
180°				
225°				
270°				
315°				

Figure:11 Shaft out of Round and Straightness

COPYRIGHT AND CONFIDENTIAL
The information on this document is the property of BHARAT HEAVY ELECTRICALS LIMITED,
It must not be used directly or indirectly in any way detrimental to the interest of the company.

COPYRIGHT AND CONFIDENTIAL
The information on this document is the property of BHARAT HEAVY ELECTRICALS LIMITED,
It must not be used directly or indirectly in any way detrimental to the interest of the company.

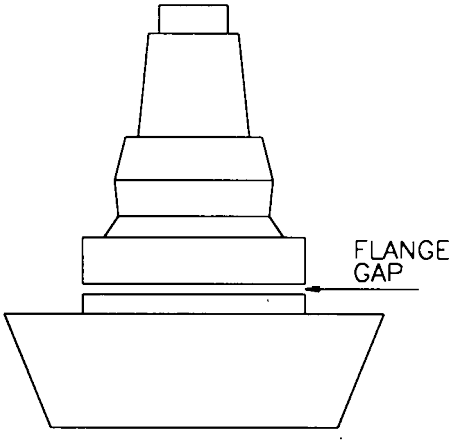

Orientation	1st TRIAL GAP	2nd TRIAL GAP	3 rd TRIAL GAP
0°			
45°			
90°			
135°			
180°			
225°			
270°			
315°			
AVG = $\frac{0 + 45 + \ldots\ldots\ldots 135}{8}$			

UPPER JOURNAL HOUSING FLANGE GAP

$$\text{Shim Pack} = \text{AVG Gap} + \frac{\text{Bearing end play, Step 5.12}}{2.} + \text{End play 'A' Table - 6}$$

SHIM PACK = ( ) + ( )+( )

SHIM PACK = ( ) mm

Figure 12: Journal Housing Flange Gap Shims.

COPYRIGHT AND CONFIDENTIAL
The information on this document is the property of BHARAT HEAVY ELECTRICALS LIMITED,
It must not be used directly or indirectly in any way detrimental to the interest of the company.

TRIAL	INDICATOR	INDICATOR READINGS			AVG. READINGS
		No Load	Lifted	No. Load	LIFTED POSITION
1	A		H_A		H^1 AVG = $\frac{H_A + H_B}{2}$
	B		H_B		
2	A		H_A		H^2 AVG =
	B		H_B		
3	A		H_A		H^3 AVG =
	B		H_B		
4	A		H_A		H^4 AVG =
	B		H_B		
5	A		H_A		H^5 AVG =
	B		H_B		
$H_{AVG} = \frac{H^1AVG + H^2AVG + H^3AVG + H^4AVG + H^5AVG}{5} =$					

Note: Refer to Procedure in text, Item 12.0

Permitted Assembly End Play = $\frac{\text{Bearing End Play, Step 5.12}}{2}$ +(End Play '2' Table 6)

H_{AVG} = Permitted Assembly End Play ± 0.001 "

( ) = ( ) + ( ) ± 0.001"

If H_{AVG} is not within ± 0.001" of the permitted assembly endplay, the journal housing flange gap shims should be changed.

Figure 13: K Journal Assembly End - Play.

ORIENTATION	1st TRIAL GAP mm	2nd TRIAL GAP mm	3 rd TRIAL GAP mm
0°			
45°			
90°			
135°			
180°			
225°			
270°			
315°			
AVG GAP = $\frac{0 + 45 + \ldots\ldots\ldots\ldots 315}{8}$			

Upper Journal Head Skirt Flange Gap

Figure 14: Journal Head Skirt Flange Gap.

COPYRIGHT AND CONFIDENTIAL
The information on this document is the property of BHARAT HEAVY ELECTRICALS LIMITED,
It must not be used directly or indirectly in any way detrimental to the interest of the company.

COPYRIGHT AND CONFIDENTIAL
The information on this document is the property of BHARAT HEAVY ELECTRICALS LIMITED,
It must not be used directly or indirectly in any way detrimental to the interest of the company.

APPENDIX-A

UPPER BEARING END PLAY

1023 -1003	Pulveriser Journal Assy. 110-00333.
963 – 1003	Pulveriser Journal Assy. 101-00921
963 – 1003	Pulveriser Journal Assy. 101-00920

SPACER GRINDING:

1. Measure and record the upper journal housing bearing bore. Use procedures on figure A-1. Determination of Bore Diameters.

2. Measure and record the bearings outside diameter use procedures on figure A-2. Journal Bearing Outside diameter. The average measurements must be between 18.000” and 18.002” or the bearing must be rejected.

3. Measure and record the spacer length, use procedures figure A-3. Journal Bearing Spacer. Length determination.

4. Record the lateral clearance of the bearing on page A-5. The calculation sheet. The value is etched on the outside diameter of the spacer.

5. Follow the worksheet calculations to determine the spacer grind value. Grind this amount off the bearing spacer then measure and record the length of the ground spacer on fig A-3. Return to section II step 3.3 of the assembly procedures.

6. Retain the figures and calculation sheet for maintenance records.

COPYRIGHT AND CONFIDENTIAL
The information on this document is the property of BHARAT HEAVY ELECTRICALS LIMITED,
It must not be used directly or indirectly in any way detrimental to the interest of the company.

Spacer Grinding Calculations.

Lateral clearance = (etched on O.D. of Spacer)

Lateral clearance = _____

Fit = Average bearing O.D (figure 2-A) – Average housing bore (fig – 1A).

Fit = ( ) – ( )

Fit = _____

Spacer grind value = Lateral clearance – 0.007” – (2.62 x (fit)

Spacer grind value = ( ) - 0.007” – (2.62 x ( )

Spacer grind value = _____

RECORD OF REVISIONS

REV. NO	DATE	REVISION DETAILS	REVISED	APPROVED
01	15.03.14	Table 6 modified	Aman	S Ghatge
02	21.01.22	Table names updated	Teja	Aman

COPYRIGHT AND CONFIDENTIAL
The information on this document is the property of BHARAT HEAVY ELECTRICALS LIMITED,
It must not be used directly or indirectly in any way detrimental to the interest of the company.